ISSN 2395-1621

Modeling and analysis of polyamide 46 (pa46) plastic spur gear in diesel engine applications by using fea

#1Shekhar Pandurang Deokar, #2 Ajay Kalmegh, #3Amit chaudhari

1shekhar.deokar1989@gmail.com
2ajaypkalmegh@rediffmail.com
3auc.amit@gmail.com

#12Sinhgad Academy Of Engineering, Pune, Maharashtra, India
#3Greaves Cotton limited, Aurangabad, Maharashtra, India

ABSTRACT

This paper deals with the idea of Modeling and Analysis of Polyamide 46 (PA46) Plastic Spur gear in diesel engine applications. Present work is to propose to substitute the metallic governor gear of engine with plastic gear to get advantages of lightweight, less cost, less wear, self-lubrication, economic considerations and simple design and less noise. Based on the static analysis, fixing of metallic insert in plastic governor gear is studied. For this purpose, Static analysis of a plastic gear is done by using ANSYS. It was observed that gear slips on the steel insert at specified torque so, design modifications are suggested for the gear to overcome this problem. Finite Element Analysis used to analyse different design concepts and to select the best concept so that gear will not slip on the steel insert. Modified plastic gear is validated on the engine test bench and performance is found to be satisfactory. Modified proposal resulted into huge cost benefit with quieter gear operation.

Keywords— **ANSYS ,Contactanalysis, Engine test bench validation, Finite Element Analysis (FEA), Polyamide 46 (PA46), Spur gears, Static analysis.**

ARTICLE INFO

Article History

Received :18th November 2015

Received in revised form :

19th November 2015

Accepted : 21st November , 2015

Published online :

22nd November 2015

I. INTRODUCTION

Plastic gears have positioned themselves as solemn alternatives to metal gears in a wide variety of applications. The use of plastic gears has expanded from low power, precision motion transmission into more demanding power transmission applications. As designers have learned about the behaviour of plastics in gearing, they push the limits of acceptable plastic gear applications. Plastic gears provide a number of advantages over metal gears. Theyrun much quieter than their metal counterparts and having less weight with lower inertia. In addition, they can run without lubrication and corrosion [1]. However there are limitations of temperature and load, and like all polymers they are viscoelastic with time-dependent behaviour, which must be allowed for in design. Design standards for plastics gears do exist but they have been adapted from those for metal gears with very little modification. A sufficient body of experimental data does not yet exist to make confident predictions about the behaviour of plastics gears over the ful1 range of operating conditions. The data, which do exist, throw doubt on the validity of the present design standards. A large number of studies have been made of polymer gear behaviour but these have been mainly confined to running polymer gears against steel. Because of the different thermal characteristics of steels and polymers the life and failure modes under these conditions are very different from those found when running polymer against polymer. For example, when running acetal against steel, failure is generally due to fatigue at the root of the tooth; when running acetal against acetal failure is invariably due to excessive tooth wear [2]. Plastic gears usually have a lower unit cost compared to metal gears, and can be designed to incorporate other features needed in the assembly. These gears can also withstand to many corrosive environments [1]. A lot of work has been carried out on the wear analysis of metal gear. Whereas very few researchers have worked on the study of wear behaviour of plastic gear and nobody has touched to the topic undertaken for study. Hence, the design and development of plastic (PA46) gear is undertaken for study.

© 2015, IERJ All Rights Reserved

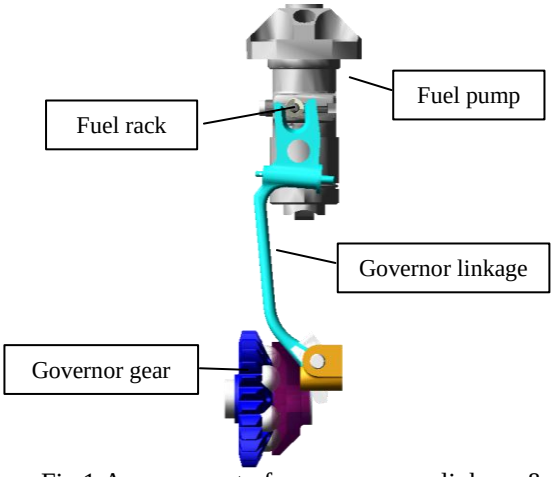

Fig.1 Arrangement of governor gear, linkage & fuel pump

In this paper, we will discuss about single cylinder air-cooled diesel engine having 7.5 Hp power. In which governor gear used to operate governor linkage whichcontrols engine speed according to acceleration as shown in fig. 1, gear material is 42 CrMo4, manufacturing root is forging. Our proposal is to convert this metallic governor gear to plastic PA 46.Governor gear is driven by crankshaft, which is rotating at 3600 rpm. As per field analysis, we came to know that in worst cases engine lubrication temperature may goes up to 260°C - 270°C. To meet this thermal requirement Polyamide 46 (PA 46) is selected. PA46 excellent properties lead to important advantages for the customer such as cost reduction, longer lifetime and high reliability. PA46 bridges the gap between conventional engineering plastics such as PA6, PA66, PBT and PET, and exotic materials such as PPS, LCP, & PEEK [3].

II. SPECIFICATION OF PROBLEM

This paper deals with static analysis of plastic gear with the help of ANSYS to eliminate slippage issue of plastic gear on steel insert. Therefore, design modifications suggested for the gear to overcome the gear slippage on steel insert. FEA used to analyse different design concepts as listed below,

Three design concepts suggested as below,

a) Gear with two slots (Slot width = 3 mm)
b) Gear with three slots (Slot width = 3 mm)
c) Gear with three slots (Slot width = 4 mm)

Same design has verified with the help of engineering bed validation for torque transmission & smoke value at different speeds.

III. FINITE ELEMENT ANALYSIS OF SPUR GEAR

Finite element modelling described as the representation of the geometric model in terms of a finite number of element and nodes. Actually,it is a numerical method employed for the solution of structures or a complex region defining a continuum. Solutions obtained by this method are hardly exact. However, errors in the approximate solution can reduced by increasing the number of equations until the desired accuracy obtained. This is an alternative to analytical methods that are used for getting exact solution of analysis problems. The solution of general problem by finite element method always follows an orderly step-by-step process. For analysis in ANSYS. The loading conditions are assumed to be static [4].

A. *Procedure for static analysis of governor Gear insert with respect to gear*

Fig. 2 shows torque applying procedure for metal gear while engine assembly. As per standard operating procedure, governor gear fits on governor shaft with torque value 5 kgm applied by torque wrench. Locking & positioning of gear done with the help of governor gear locking tool.

Fig. 2 Positioning& locking of metal gear

Fig. 3 Positioning & locking of plastic gear

To perform analysis we need to set boundary conditions according to insert fitting procedure.

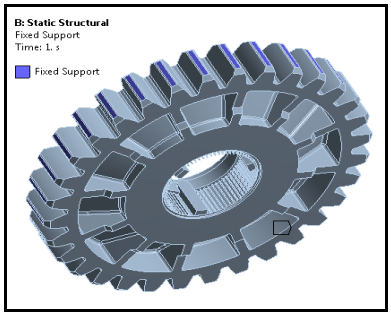

Fig. 4Positioning& locking of plastic gear

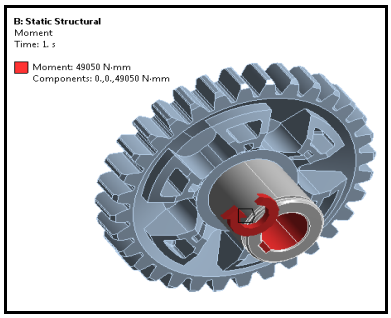

Fig. 5 loading conditions for structural analysis

© 2015, IERJ All Rights Reserved

Fixed support applied at the top of governor gear heighted with blue in fig. 4.Now moment of 49050 N-mm applied on insert as shown in fig. 5.

With the help of above procedure, we can perform analysis to check design is safe or not for slip of steel insert in governor gear. We performed analysis on three design concepts as follows:

B. Gear with two slots (Slot width = 3 mm)

Fig. 6 shows steel insert having 2 slots with 3mm slot width. We performed analysis by keeping tooth profile as fix and applied moment on steel insert as shown in fig. 7.

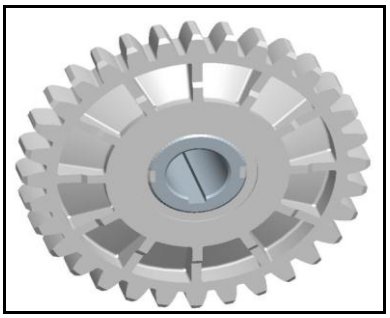

Fig. 6Gear with two slots(Slot width = 3 mm)

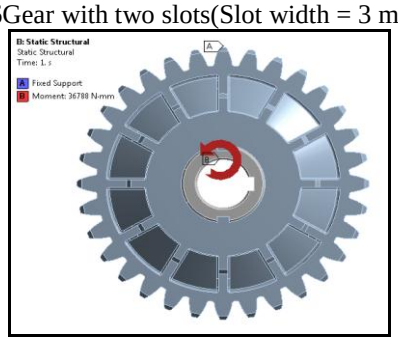

Fig. 7 Boundary condition

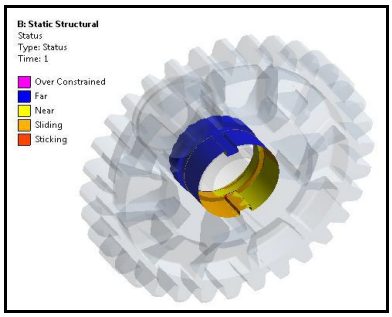

Fig. 8Contact analysis

Fig. 8 Shows steel insert with 2 slots with 3 mmwidth can able to sustain maximum moment of 36790Nmm after that slippage of gear occurs.

This design has not found suitable due to gear slippage less than 49050 N-mm.

C. Gear with three slots (Slot width = 3 mm)

Fig. 9 shows steel insert having 3 slots with 3mm slot width. We performed same analysis by keeping tooth profile as fix and applying moment on insert as shown in fig. 10.

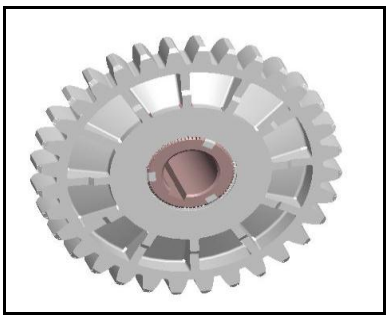

Fig. 9Gear with threeslots(Slot width = 3 mm)

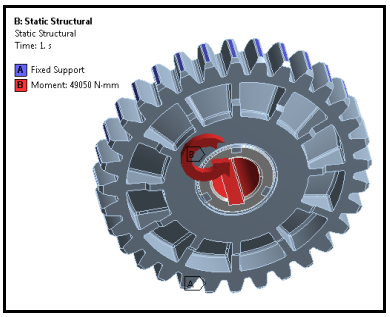

Fig. 10 Boundary condition

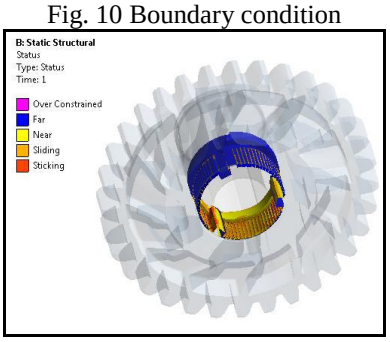

Fig. 11 Contact analysis

Fig. 11 shows steel insert with 3 slots with 3 mm width can able to sustain maximum moment of 49050 N-mm after that slippage of gear occurs.

This design satisfies minimum safe conditions but to make it more safer modification in design is required.

D. Gear with three slots (Slot width = 4 mm)

Fig. 12 shows steel insert having 3 slots with 4mm slot width. We performed same analysis by keeping tooth profile as fix and applying moment on insert as shown in fig 13

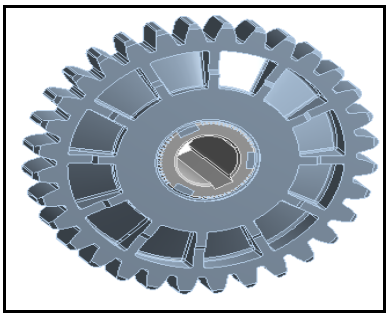

Fig. 12Gear with threeslots (Slot width = 4 mm)

© 2015, IERJ All Rights Reserved

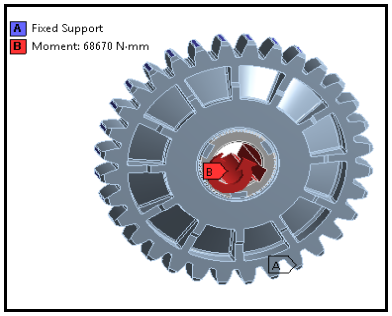

Fig. 13 Boundary condition

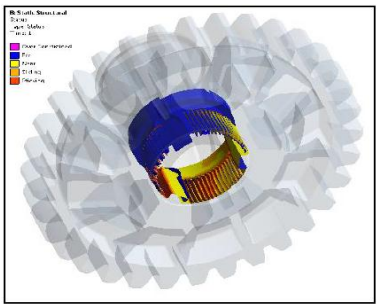

Fig. 14 Contact analysis

Fig. 14 Shows steel insert with 3 slots with 4 mm width can able to sustain maximum moment of 68670 N-mm

This is safer design compare to other designs. & it satisfies our requirement.

IV. RESULTS - ENGINE TEST BENCH PERFORMANCE V.

Engine is tested on eddy current dynamometer & required parameters are being sets on engine. We have taken three engines to check existing metal gear & plastic gear sample (three slot of 4 mm slot width) has tested on engine testing bench and the detail analysis of critical parameters such as Torque & Smoke has validated.

For better accuracy of validation, this plastic gear has tested at two different operating speeds i.e. at 3600 & 1400 rpm for 25 hrs. The results have discussed below.

A. Results for Torque transmission and smoke value of plastic & existing metal gear at 3600 rpm

For ensuring the accuracy of results, 3 samples of both the gears have been tested against minimum torque value of 13.2 N-mm

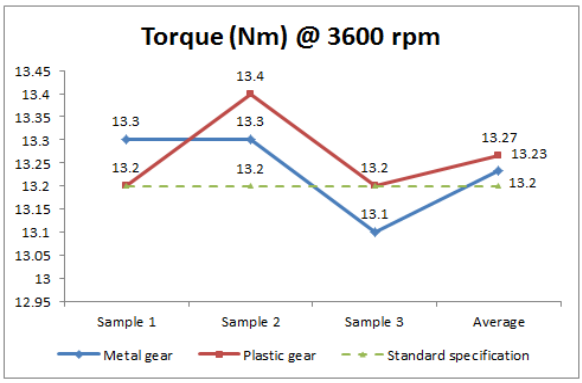

Fig. 15Torque comparison at 3600 rpm

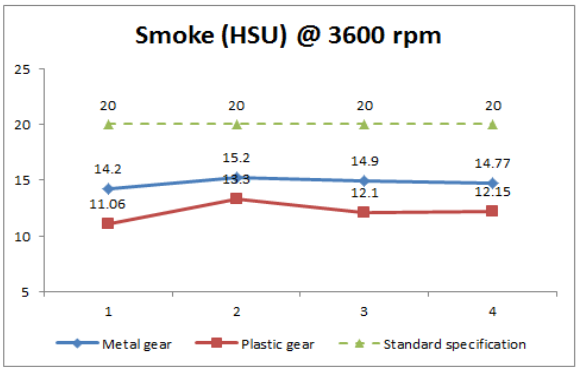

Fig.16Smoke values at 3600 rpm

Fig. 15&16 shows the respective values of Torque and smoke at 3600 rpm. Here it has observed that the plastic gear gives satisfactory results for torque transmission and less smoke values as compared to metal gear.

B. Results for Torque transmission and smoke value of plastic & existing metal gear at 1400 rpm

Again, 3 samples were tested for toque value of minimum 12.5 N-mm.

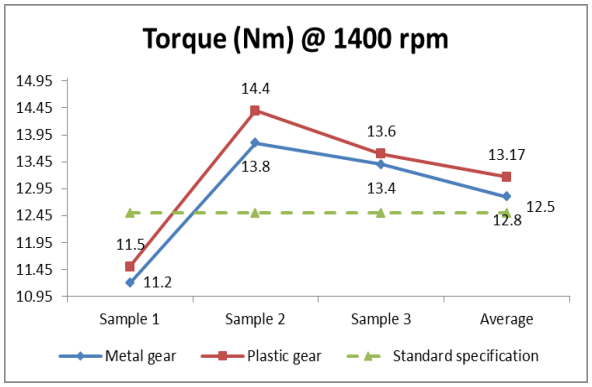

Fig 17 Torque comparison at 1400 rpm

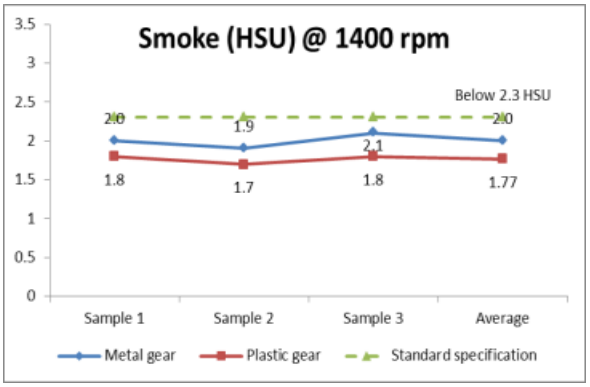

Fig 18 Smoke values at 1400 rpm

After validating plastic gear at 1400 rpm there was no abnormality found in gears.

VI. CONCLUSION

This paper suggests appropriate plastic gear design to avoid slippage of metallic insert on gear by using FEA analysis. Insert does not slip when insert is designed with three slots with 4 mm width. As per FEA analysis,

© 2015, IERJ All Rights Reserved

manufactured plastic governor gear given satisfactory results in engine test bench validation for parameters like torque transmission & smoke at 1400rpm i.e. at ideal rpm & 3600 rpmi.e. at maximum rpm. Therefore, we can conclude that, Plastic gear can be act as a alternate for metallic gear in engines to get advantages of lightweight, low noise, less wear, self-lubrication, less cost, economic considerations, simple design with high production rate in manufacturing. It can help to establish plastic gear standard and it is beneficial for the design and manufacturing of plastic gears.

REFERENCES

[1] A. D. Dighe , A. K. Mishra, V.D.Wakchaure "Investigation of wear resistance and torque transmission capacity of glass filled polyamide and PEEK composite spur gear" IJEAT, ISSN : 2249 – 8958, Volume-3, issue – 3 , Feb 2014

[2] A.R.Breeds, S.N.Kukureka,k.Mao, D.Walton, C.J.Hooke"Wear behavior ofacetalgearpairs"Wear,166(1993)85-91,Dec-1992

[3]DSM engineering plastics, "PA-46 general information on applications, processing and properties.

[4] V. Siva Prasad, Syed AltafHussain, V.Pandurangadu, K.PalaniKumar "Modeling and Analysis of Spur Gear for Sugarcane Juice Machineunder Static Load Condition by UsingFEA" International Journal of Modern Engineering Research (IJMER), Vol.2,Issue.4,July-Aug2012 pp-2862-2866, ISSN : 2249-6645

[5] AshishN.Taywade, Dr. V. G. Arajpure, "Design and Development of Nylon 66 Plastic Helical Gears in Automobile Application", International Journal of Engineering Research & Technology (IJERT), ISSN: 2278-0181Vol. 3 Issue 9, September, 2014

[6] Ah-Der Lin , Jao-HwaKuang " Dynamic interaction between contact loads and tooth wear of engaged plastic gear pairs" Science Direct ,International Journal of Mechanical Sciences 50 (2008) 205 – 213.

[7] Amarjeet R. Gupta "Application of Different Thermoplastic Gears in the gear box of Moped " International Journal for engineering applications and Technology (IJFEAT) ISSN : 2321 – 8134 Oct 2013

© 2015, IERJ All Rights Reserved